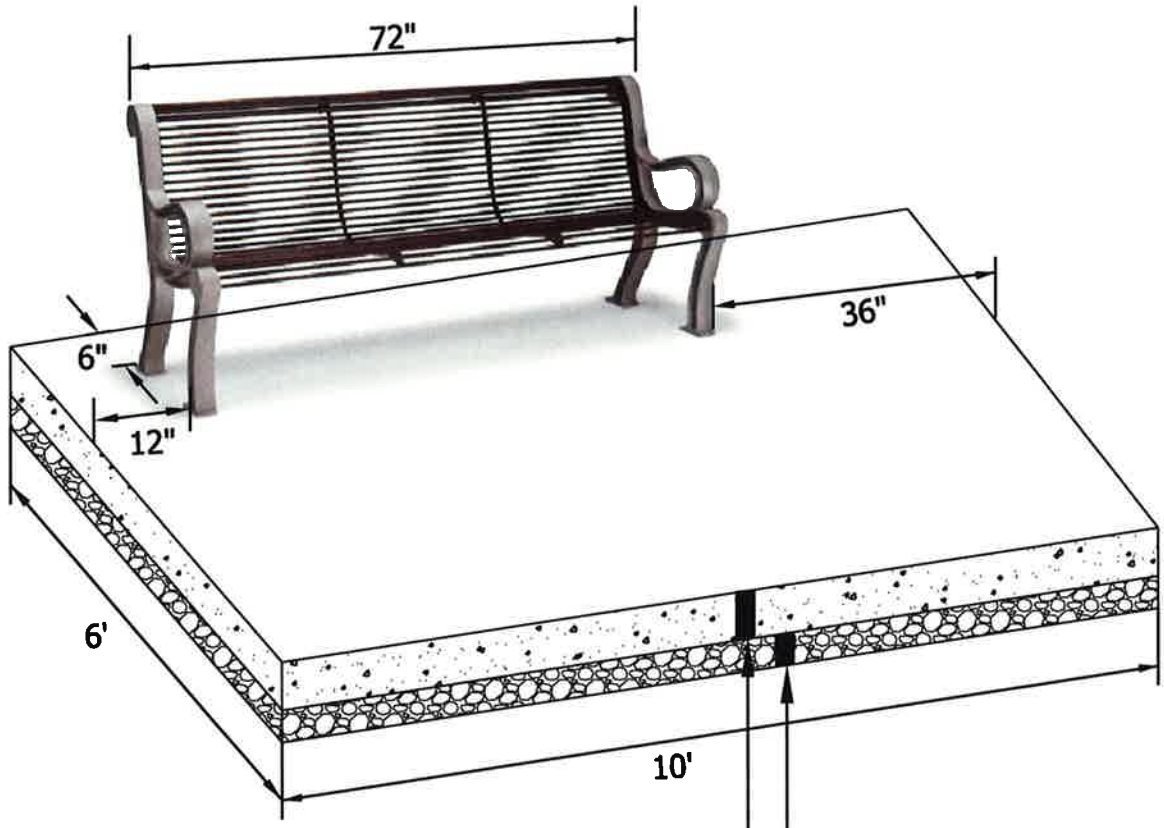

6" CONCRETE MIX NO. 3Y32A

4" CLASS 5 AGGREGATE BASE, 100% CRUSHED

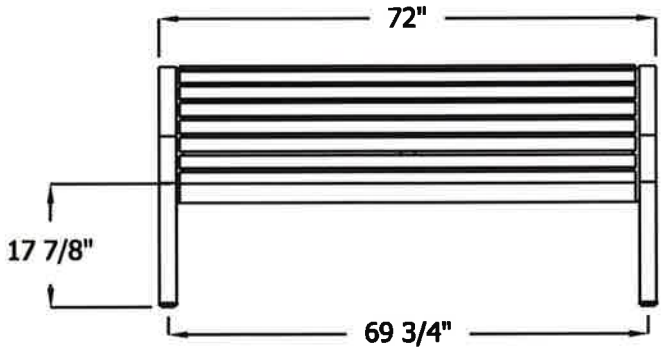

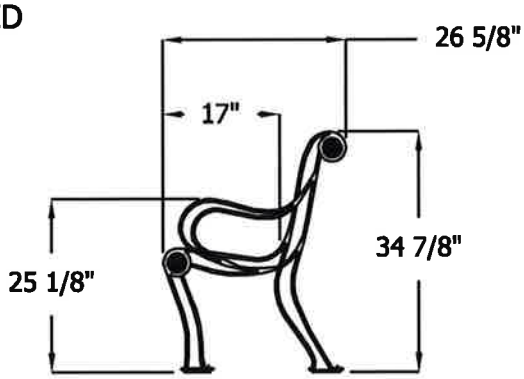

Model	Description	Pattern	Weight	Concrete
BU 1114C	6' Bench with back	Rod (O)	254 lb.	6' x 10'

Cottage Grove
Where Pride and Prosperity Meet

Stantec

STANDARD DETAILS

PARK BENCH

COTTAGE GROVE, MINNESOTA

LAST REVISION:
MAY 2014

PLATE NO.
SPECIAL-3

48_SPECIAL3.DWG