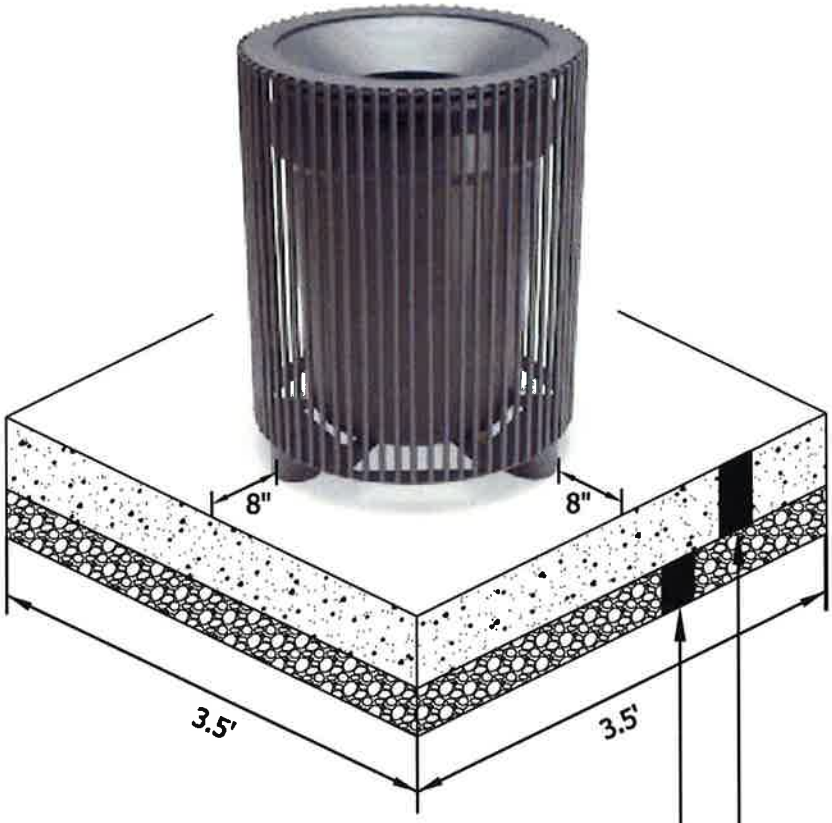

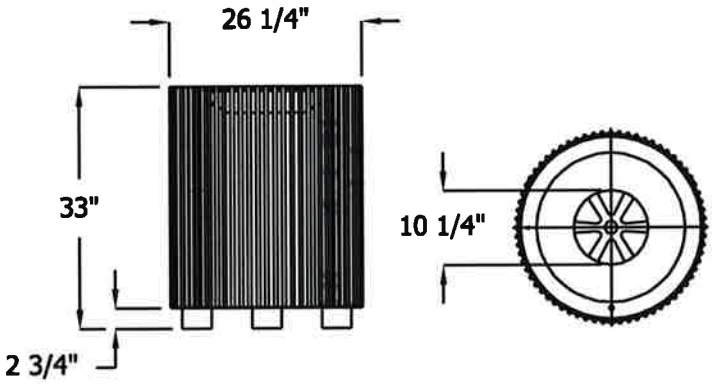

Model	Description	Pattern	Weight	Concrete
TE 3F34P	32-Gallon Flat Top Lid	Rod (O)	177 lb.	3.5' x 3.5'

Cottage Grove
Where Pride and Prosperity Meet

Stantec

STANDARD DETAILS

TRASH CAN

COTTAGE GROVE, MINNESOTA

LAST REVISION:
MAY 2014

PLATE NO.
SPECIAL-4

48_SPECIAL4.DWG