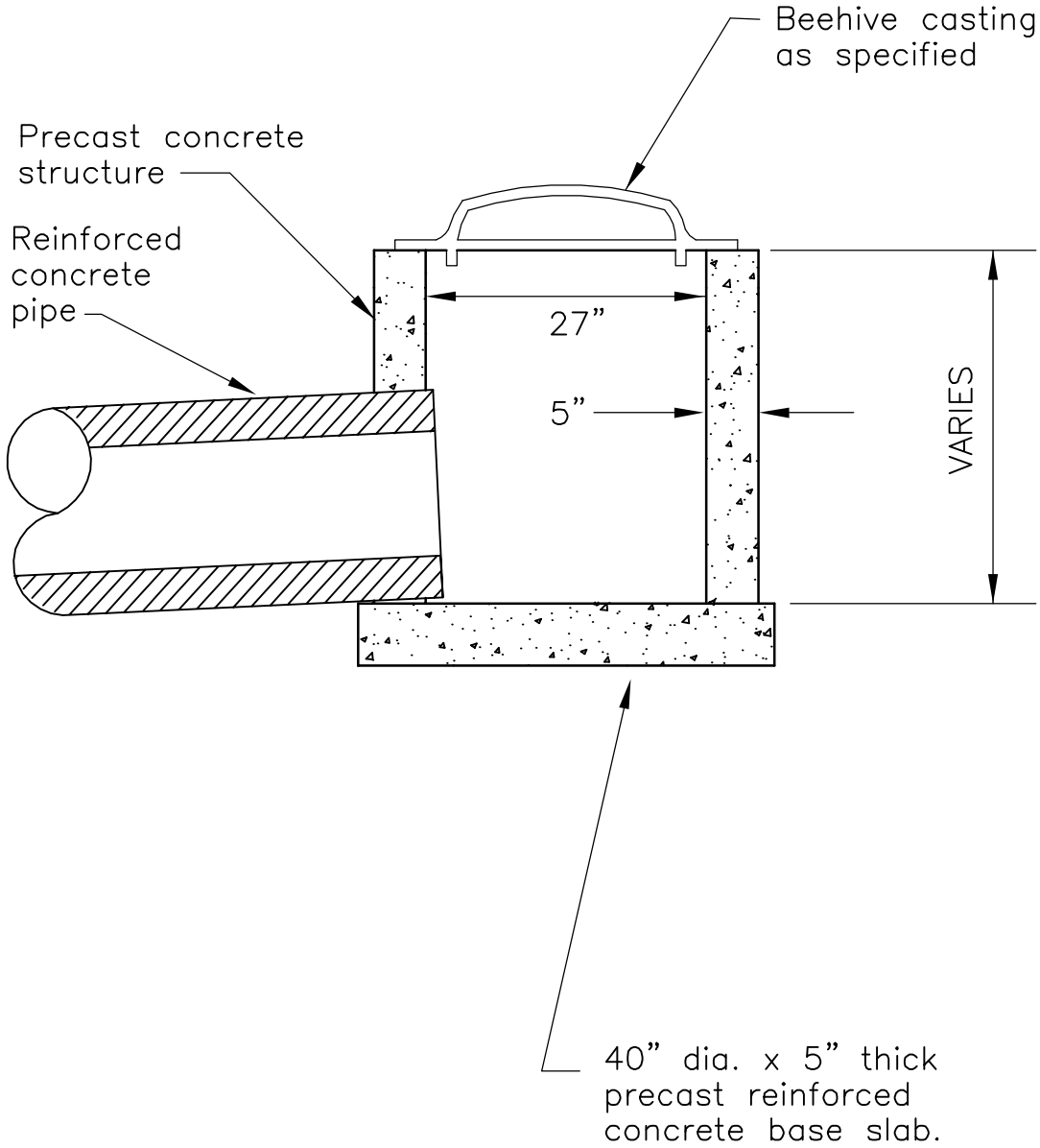

Cottage Grove
Where Pride and Prosperity Meet
Stantec

STANDARD DETAILS

PRECAST 27" SHALLOW DEPTH BEEHIVE

COTTAGE GROVE, MINNESOTA

LAST REVISION: JAN 2014

PLATE NO. STO-12

48_STO12.DWG