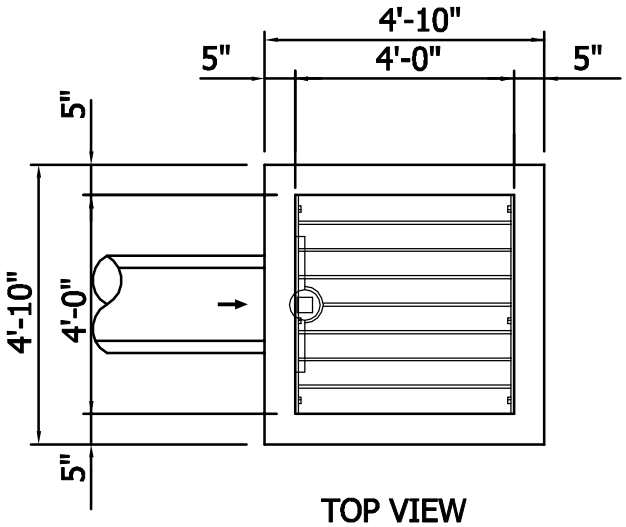

TOP VIEW

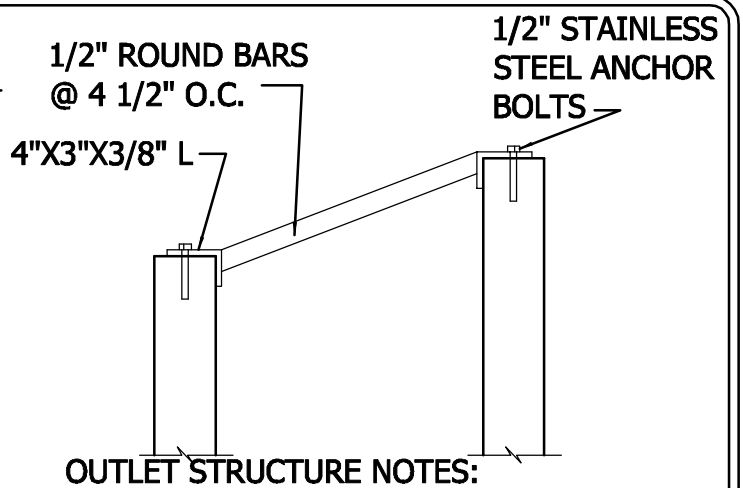

MANHOLE STEPS, NEENAH R1981J
OR EQUAL, 16" ON CENTER.
ALUMINUM STEPS APPROVED

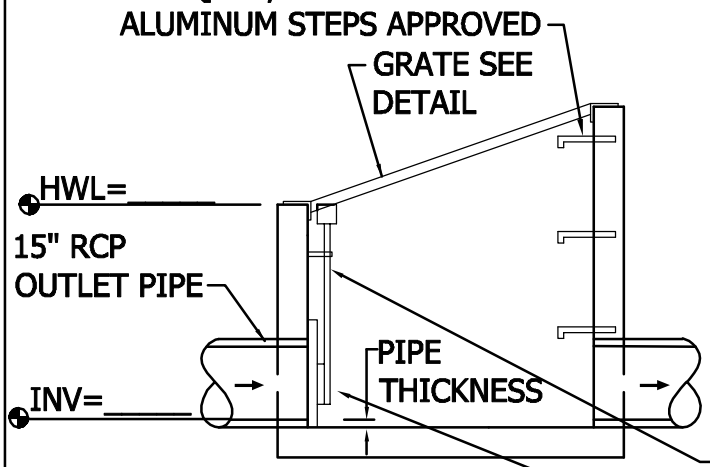

SIDE VIEW

OUTLET STRUCTURE NOTES:

1. OUTLET STRUCTURE SHALL BE REINFORCED PRECAST CONCRETE.
2. GRATING SHALL BE HOT DIPPED GALVANIZED AFTER FABRICATION.
3. ALL ANCHOR BOLTS SHALL BE 1/2"ϕ S.S. EXP. ANCHORS W/ 4" MIN. EMBEDMENT.
4. MAXIMUM SIZE OUTLET PIPE TO BE 15".
5. FOR STRUCTURES CAST IN 2 SECTIONS, MASTIC SHALL BE USED TO PROVIDE A WATERTIGHT SEAL AND SECTIONS SHALL BE SECURED USING WELD PLATES.
6. GRATE MAY BE VARIED WITH APPROVAL FROM ENGINEER
7. ENGINEER TO REVIEW SHOP DRAWINGS BEFORE CONSTRUCTION

SLUICE GATE OPERATING NUT & ROD SECURE TO WALL W/MOUNTING BRACKET

SLUICE GATE W/ SPECIFIED ORIFICE
- 12" OPENING N.R. STEM
- 2" SQUARE OPERATING NUT
- 4 1/2" ORIFICE AS SPECIFIED

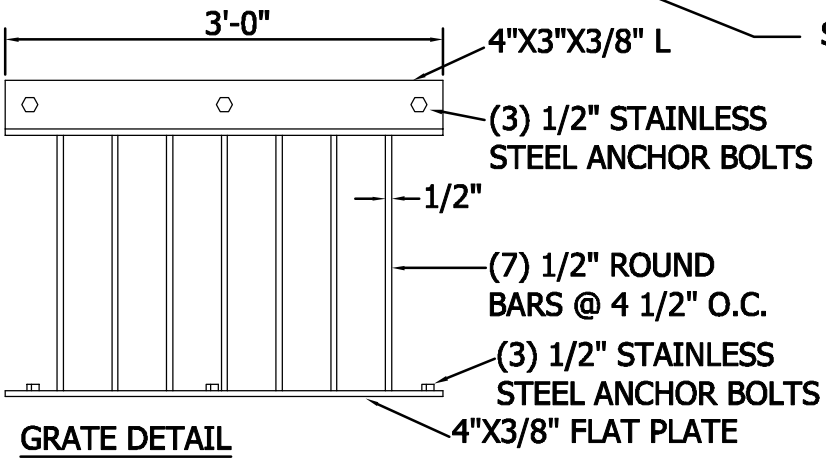

GRATE DETAIL

Cottage Grove
Where Pride and Prosperity Meet
Stantec

STANDARD DETAILS

OVERFLOW STRUCTURE WITH
SLUICE GATE WITH ORIFICE

COTTAGE GROVE, MINNESOTA

LAST REVISION:
JAN 2014

PLATE NO.
STO-23

48_STO23.DWG