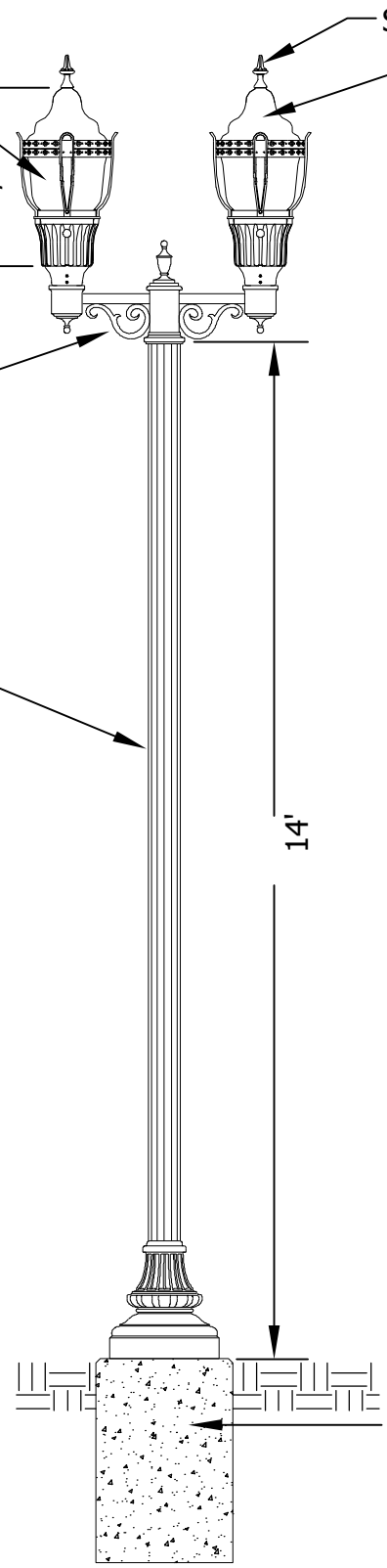

GENERAL NOTES:

1. ALL LIGHTING ASSEMBLIES SHALL CONTAIN ALL MODIFICATIONS NECESSARY TO COMPLY WITH XCEL REQUIREMENTS.

2. EXACT LOCATIONS OF ALL ASSEMBLIES SHALL BE VERIFIED BY THE ENGINEER.

3. WIRING AND CONDUIT PER STATE ELECTRICAL CODE

Cottage Grove
Where Pride and Prosperity Meet

Stantec

STANDARD DETAILS

LIGHTING DETAIL RAVINE PARKWAY
NEW LED FIXTURE

COTTAGE GROVE, MINNESOTA

LAST REVISION:
JAN 2014

PLATE NO.
LGT-12

48_LGT10.DWG