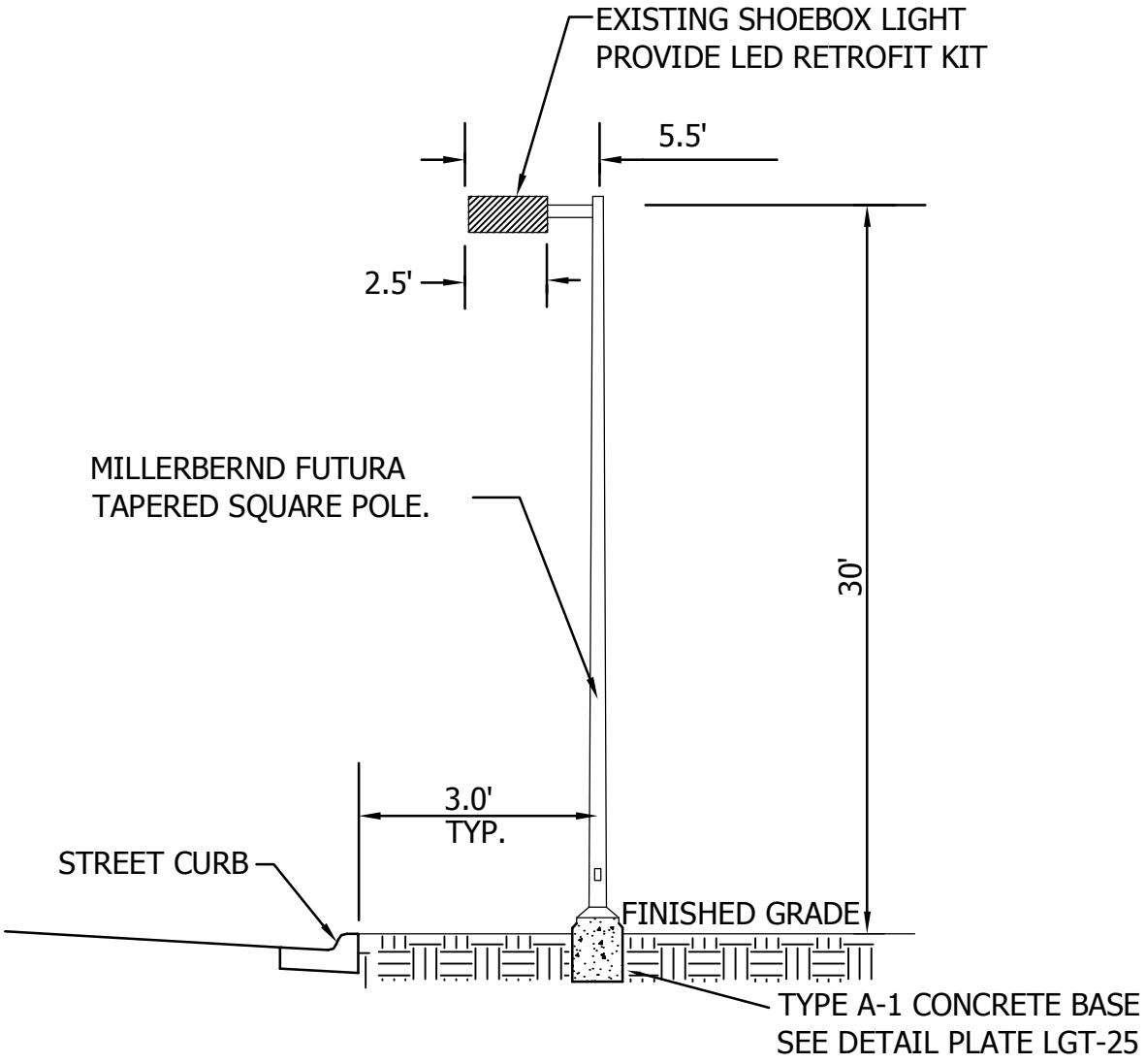

GENERAL NOTES:

ALL LIGHTING ASSEMBLIES SHALL CONTAIN ALL MODIFICATIONS NECESSARY TO COMPLY WITH XCEL REQUIREMENTS.

EXACT LOCATION OF ALL ASSEMBLIES SHALL BE VERIFIED BY THE ENGINEER.

NO SCALE

Cottage Grove
Where Pride and Prosperity Meet

Stantec

STANDARD DETAILS

EXISTING STREET LIGHT POLE WITH SHOEBOX LED UPGRADE KIT

COTTAGE GROVE, MINNESOTA

LAST REVISION:
JAN 2014

PLATE NO.
LGT-17

48_LGT16.DWG