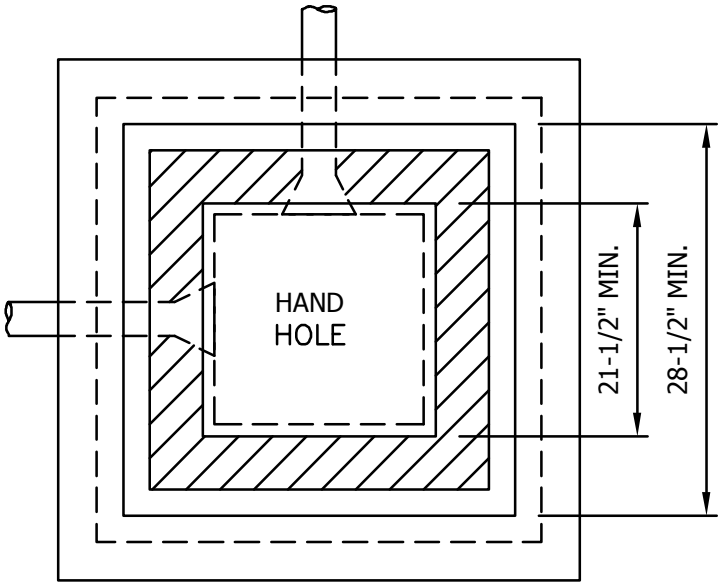

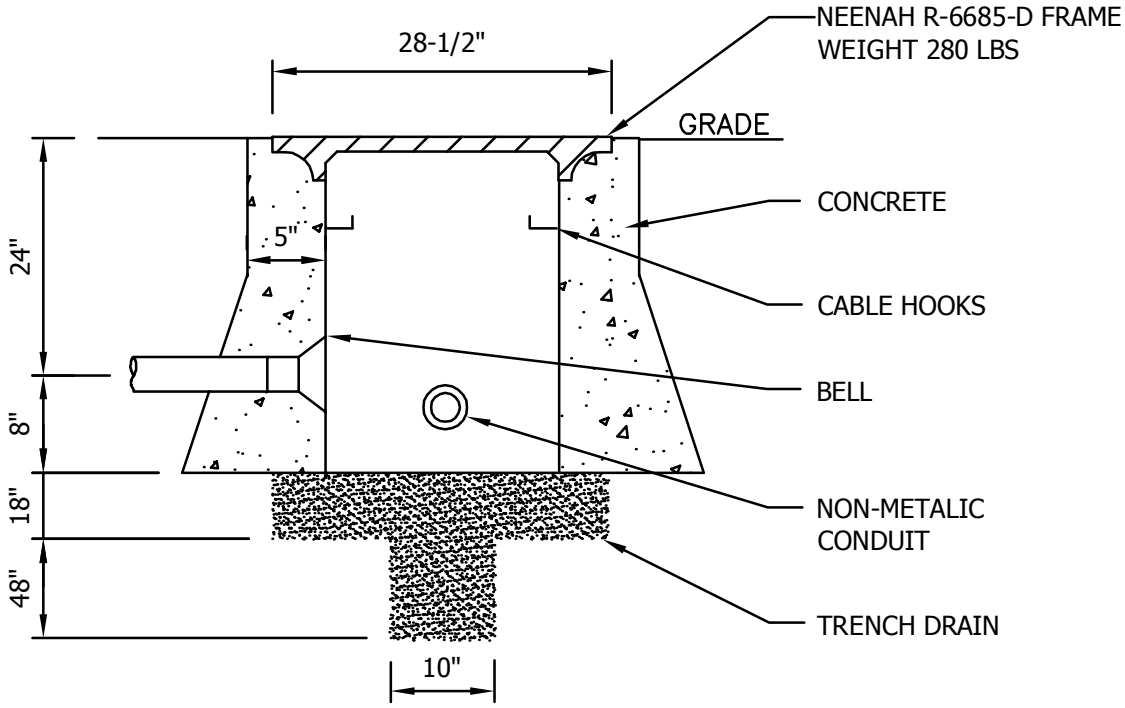

XX / XXX.XX — HAND HOLE DETAIL

NOT TO SCALE

Cottage Grove
Where Pride and Prosperity Meet

Stantec

STANDARD DETAILS

STREET LIGHTING HANDHOLE

COTTAGE GROVE, MINNESOTA

LAST REVISION:
JAN 2014

PLATE NO.
LGT-26

48_LGT26.DWG