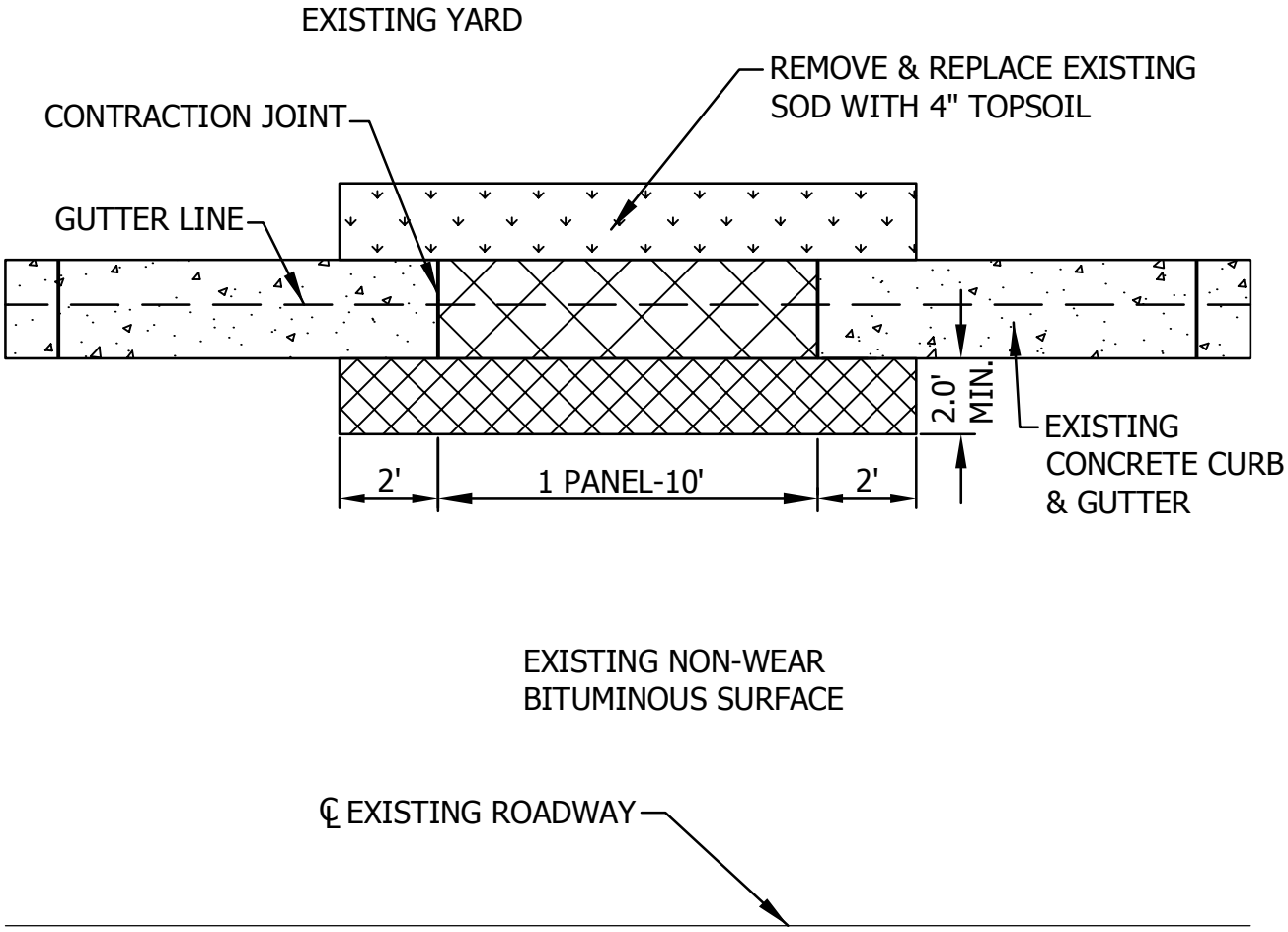

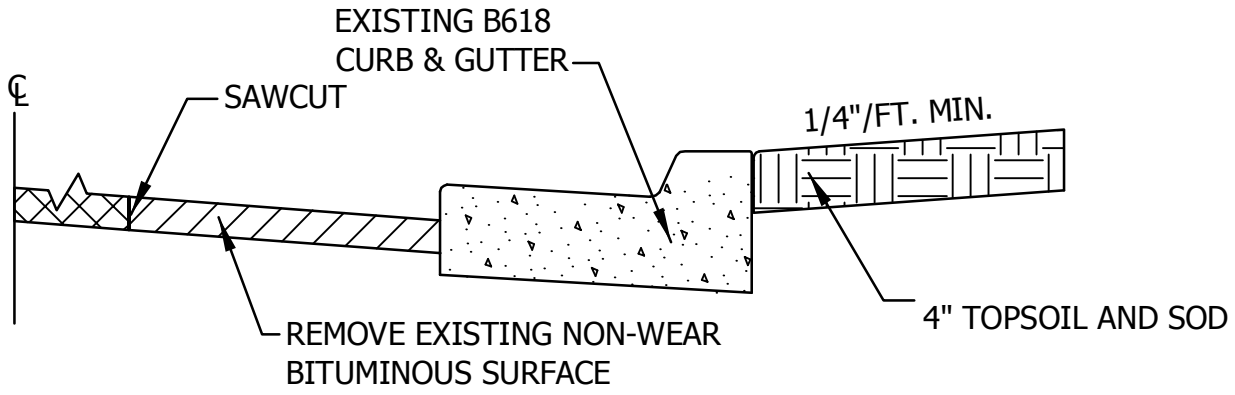

SECTION

Cottage Grove
Where Pride and Prosperity Meet
Stantec

STANDARD DETAILS

CONCRETE CURB REPLACEMENT
NON WEAR -
COMMERCIAL/INDUSTRIAL
COTTAGE GROVE, MINNESOTA

LAST REVISION:
JAN 2014

PLATE NO.
STR-20

48_STR20.DWG