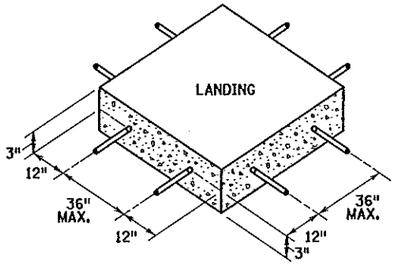

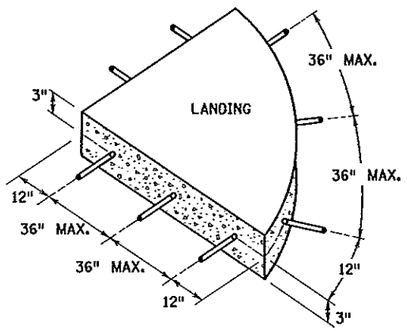

SIDEWALK REINFORCEMENT ⑤ ⑥

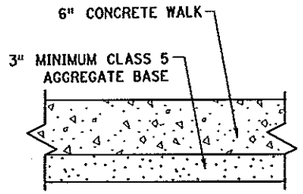

TYPICAL SIDEWALK SECTION
WITHIN INTERSECTION CORNER

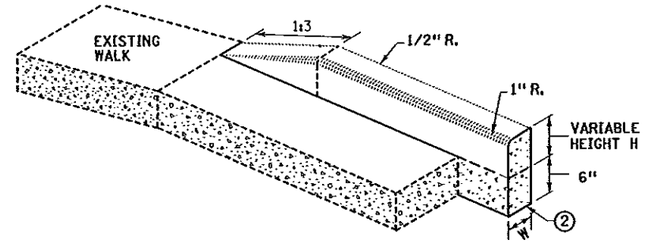

V CURB ADJACENT TO LANDSCAPE
CURB WITHIN SIDEWALK LIMITS

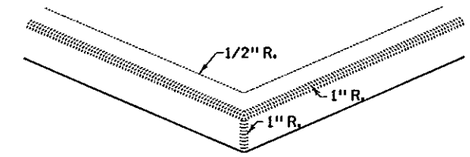

V CURB INTERSECTION

CONCRETE CURB DESIGN V	
CURB HEIGHT H	CURB WIDTH W
< 6"	4"
≥ 6"	6"

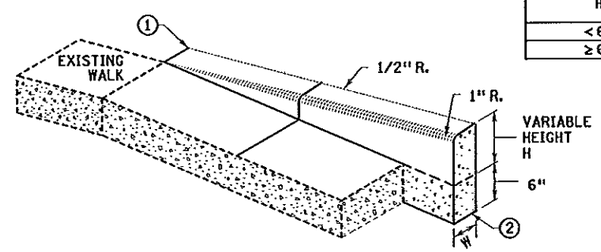

V CURB ADJACENT TO LANDSCAPE
CURB OUTSIDE SIDEWALK LIMITS

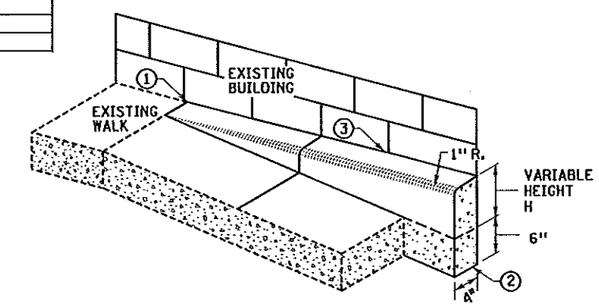

V CURB ADJACENT TO BUILDING
OR BARRIER

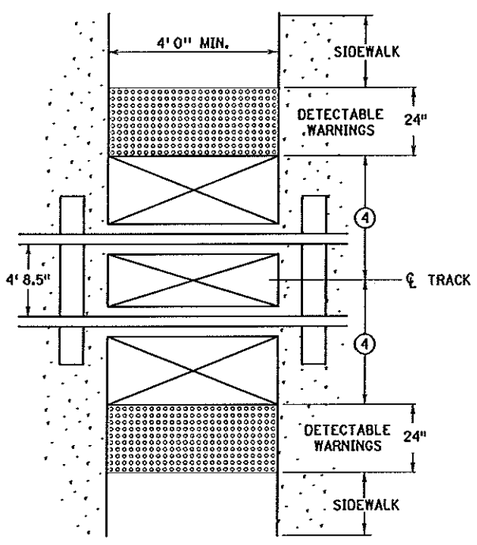

RAILROAD CROSSING
PLAN VIEW

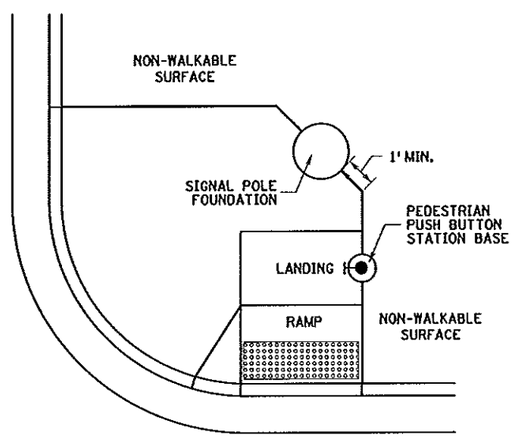

CONCRETE WALK EDGES ADJACENT
TO CONCRETE STRUCTURES

NOTES:

ALL V CURB CONTRACTION JOINTS SHALL MATCH CONCRETE WALK JOINTS.

WHERE RIGHT-OF-WAY ALLOWS, USE OF V CURB SHOULD BE MINIMIZED. GRADING ADJACENT TURF OR SLOPING ADJACENT PAVEMENT IS PREFERRED.

V CURB SHALL BE PLACED OUTSIDE THE SIDEWALK LIMITS WHEN RIGHT OF WAY ALLOWS.

V CURB NEXT TO BUILDING SHALL BE A 4" WIDTH AND SHALL MATCH PREVIOUS TOP OF SIDEWALK ELEVATIONS.

① END TAPERS AT TRANSITION SECTION SHALL MATCH INPLACE SIDEWALK GRADES.

② ALL V CURB SHALL MATCH BOTTOM OF ADJACENT WALK.

③ EDGE BETWEEN NEW V CURB AND INPLACE STRUCTURE SHALL BE SEALED AND BOND BREAKER SHALL BE USED BETWEEN EXISTING STRUCTURE AND PLACED V-CURB.

④ EDGE OF DETECTABLE WARNING SURFACES SHALL BE PLACED 15' MAXIMUM FROM THE CENTERLINE OF THE TRACK. WHEN PEDESTRIAN GATES ARE PROVIDED, DETECTABLE WARNING SURFACES SHALL BE PLACED ON THE SIDE OF THE GATES OPPOSITE THE RAIL, 17" - 19" FROM THE APPROACHING SIDE OF THE GATE ARM.

⑤ WHEN PLAN SPECIFIES, DRILL AND GROUT NO. 4 12" LONG REINFORCEMENT BARS AT 36" MAX. CENTER TO CENTER (EPOXY COATED).

⑥ TO ENSURE RAMPS AND LANDINGS ARE PROPERLY CONCTRUCTED, LANDINGS MAY BE CAST SEPARATELY. FOLLOW SIDEWALK REINFORCEMENT DETAILS ON THIS SHEET WHEN LANDINGS ARE CAST SEPARATELY.

STANDARD PLAN SHEET NO. 5-297.250 (5 OF 5)	PEDESTRIAN CURB RAMP DETAILS
STANDARD APPROVED: APRIL 10, 2013	
STATE PROJ. NO.	(TH) SHEET NO. OF SHEETS

PLOTTED/REVISED: 07-MAY-2013
DISTRICT #: INSERT DISTRICT NAME HERE
USER NAME: $$@USER$NAME@$$
PATH & FILENAME: IP_PWP-dll4388\s250_5_spn.dgn
FILE NAME: @FILENAME@