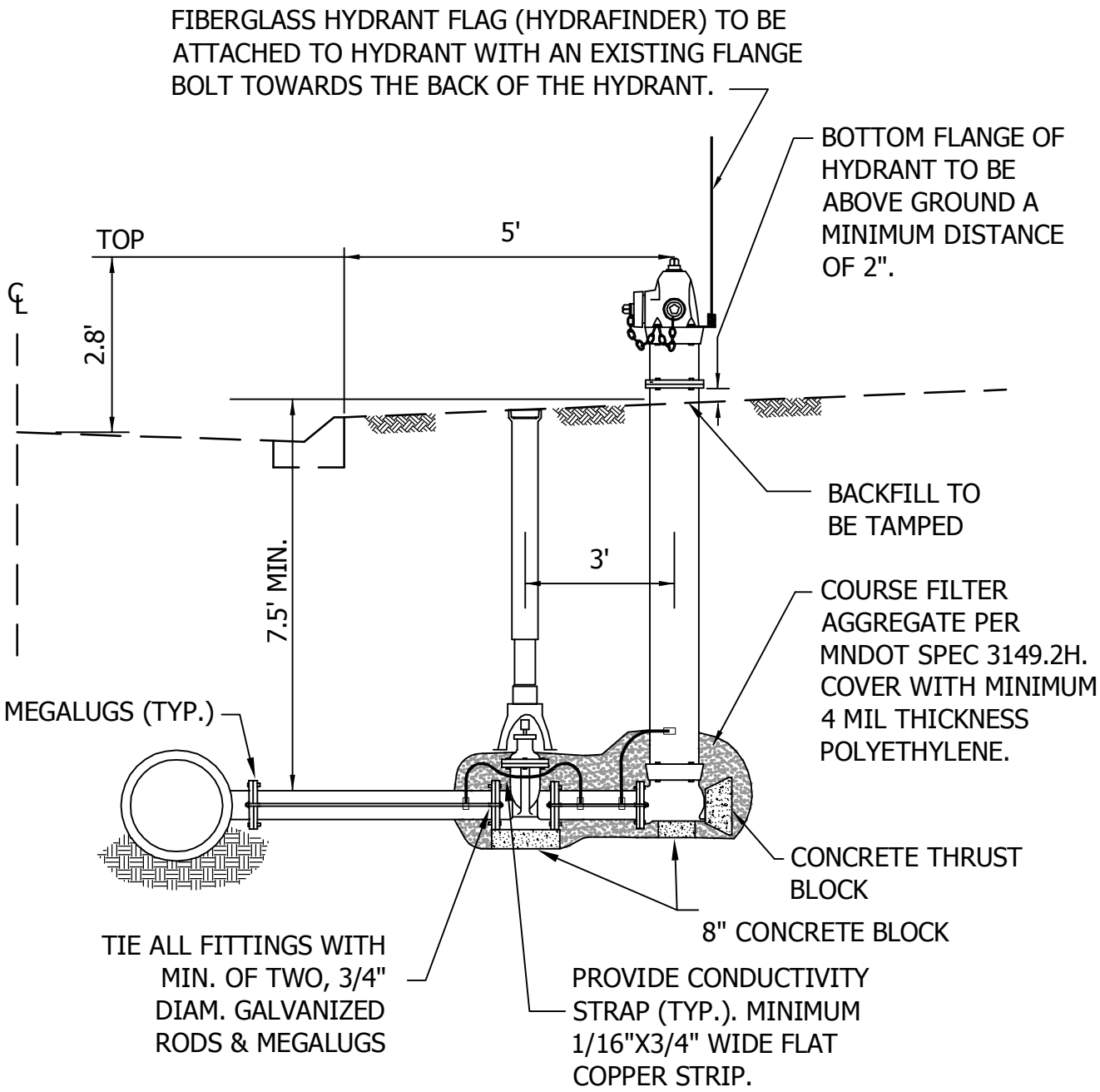

NOTES:

1. HYDRANT SHALL BE WATEROUS PACER - WB67-250
2. ALL D.I.P. WATERMAIN SHALL BE WRAPPED WITH 8 MIL PLASTIC INCLUDING ALL MECHANICAL JOINTS. ALL D.I.P. SHALL BE CLASS 52.
3. ALL DUCTILE IRON WATERMAIN FITTING SHALL BE FUSION BONDED EPOXY COATED.
4. PROVIDE ONE EXTRA HYDRANT FLAG PER HYDRANT TO THE CITY.
5. INSTALL OUT OF SERVICE TAGS TO THE HYDRANTS UNTIL TESTED AND PASSED.

Cottage Grove
Where Pride and Prosperity Meet
Stantec

STANDARD DETAILS

HYDRANT DETAIL

COTTAGE GROVE, MINNESOTA

LAST REVISION:
JAN 2014

PLATE NO.
WAT-1

48_WAT1.DWG